Electrolux PROFESSIONAL

Modular Cooking Range Line 700XP Two Wells Gas Fryer Top 7 liter

ITEM #

MODEL #

NAME #

SIS #

AIA #

371067 (E7FRGH2B00)	7+7-lt gas Fryer Top with 2 "V" shape wells (external burners), 2 baskets and lids included

Short Form Specification

Item No.

To be installed on open base installations, bridging supports or cantilever systems. Two high efficiency 7 kW burners in stainless steel. Suitable for natural gas or LPG. Deep drawn V-shaped well. Oil drains through a tap on the front. Exterior panels in stainless steel with Scotch Brite finish. One piece pressed work top in 1.5 mm thick stainless steel. Right-angled side edges to allow flush-fitting junction between units.

APPROVAL:

Main Features

- Unit to be mounted on open base cupboards, bridging supports or cantilever systems.
- Deep drawn V-Shaped wells.
- Interior of wells with rounded corners for ease of cleaning.
- Two high efficiency 7 kW burners in stainless steel with flame failure device attached to the outside of the wells.
- Thermostatic regulation of oil temperature up to a maximum of 185 °C.
- Flame failure device on each burner.
- Overheat protection thermostat as standard on all units.
- Oil drains through a tap positioned on the front the wells.
- All major compartments located in front of unit for ease of maintenance.
- Piezo spark ignition for added safety.
- Gas appliance supplied for use with natural or LPG gas, conversion jets supplied as standard.
- IPx4 water protection.
- Optional portable oil quality monitoring tool (code 9B8081) for efficient oil management.
- Suitable for countertop installation.

Construction

- All exterior panels in Stainless Steel with Scotch Brite finishing.
- One piece pressed 1.5 mm work top in Stainless steel.
- Model has right-angled side edges to allow flush fitting joints between units, eliminating gaps and possible dirt traps.

Sustainability

- This model is compliant with Swiss Energy Efficiency Ordinance (730.02).

Included Accessories

- 2 of Basket for 7lt top and free standing fryers — PNC 921608

Optional Accessories

- Junction sealing kit — PNC 206086 ❑
- Draught diverter, 150 mm diameter — PNC 206132 ❑
- Matching ring for flue condenser, 150 mm diameter — PNC 206133 ❑
- Support for bridge type installation, 800mm — PNC 206137 ❑
- Support for bridge type installation, 1000mm — PNC 206138 ❑
- Support for bridge type installation, 1200mm — PNC 206139 ❑
- Support for bridge type installation, 1400mm — PNC 206140 ❑
- Support for bridge type installation, 1600mm — PNC 206141 ❑

• Flue condenser for 1 module, 150 mm diameter	PNC 206246	❑
• Chimney upstand, 800mm	PNC 206304	❑
• Right and left side handrails	PNC 206307	❑
• Back handrail 800 mm	PNC 206308	❑
• Chimney grid net, 400mm (700XP/900)	PNC 206400	❑
• Kit G.25.3 (NI) gas nozzles for 900 fryers	PNC 206467	❑
• 2 side covering panels for top appliances	PNC 216277	❑
• Basket for 7lt top and free standing fryers	PNC 921608	❑
• Pressure regulator for gas units	PNC 927225	❑

The company reserves the right to make modifications to the products without prior notice. All information correct at time of printing.

2024.10.06

Modular Cooking Range Line 700XP Two Wells Gas Fryer Top 7 liter

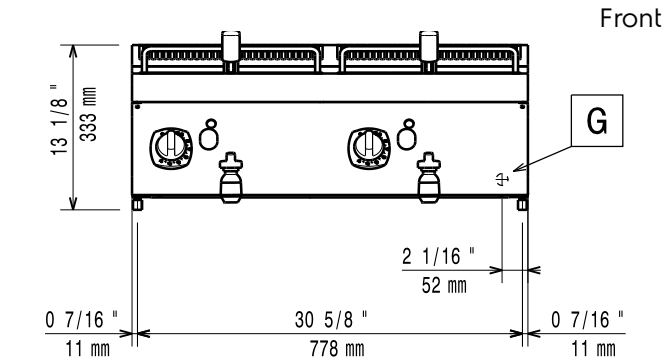

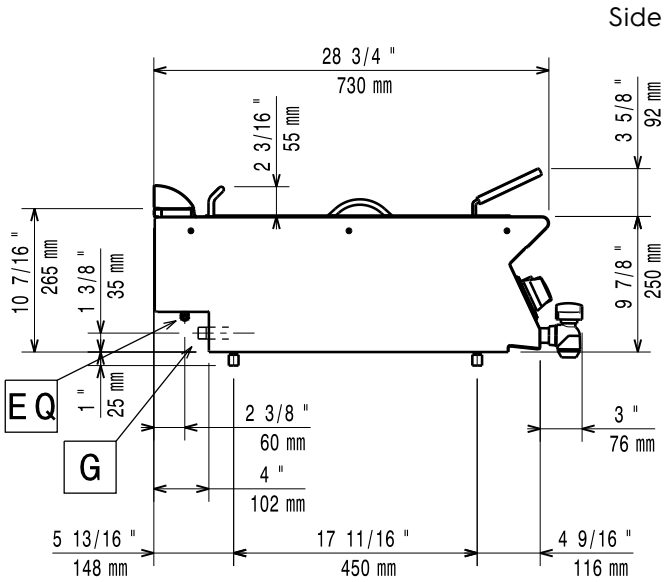

EQ = Equipotential screw
G = Gas connection

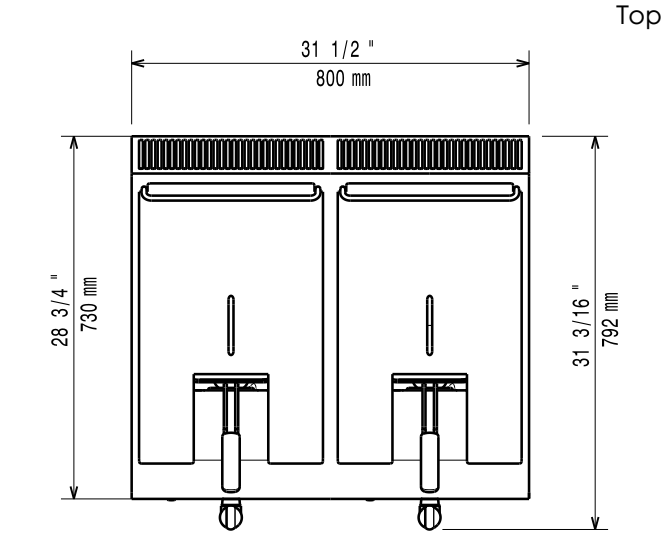

Gas

Gas Power:	
371067 (E7FRGH2B00)	14 kW
Standard gas delivery:	Natural Gas G20 (20mbar)
Gas Type Option:	LPG;Natural Gas
Working pressure, mBar (min/Max):	0 / 0
Gas Inlet:	1/2"

Key Information:

Usable well dimensions (width):	240 mm
Usable well dimensions (height):	235 mm
Usable well dimensions (depth):	380 mm
Well capacity:	5.5 lt MIN; 7 lt MAX
Thermostat Range:	105 °C MIN; 185 °C MAX
Net weight:	47 kg
Shipping weight:	54 kg
Shipping height:	540 mm
Shipping width:	820 mm
Shipping depth:	860 mm
Shipping volume:	0.38 m³

If appliance is set up or next to or against temperature sensitive furniture or similar, a safety gap of approximately 150 mm should be maintained or some form of heat insulation fitted.

Certification group:	N7FG

The company reserves the right to make modifications to the products without prior notice. All information correct at time of printing.

2024.10.06